Work Order ID 71123

Thursday, June 23, 2011 11:04:56 AM

Item ID: D4038-042 **Accept** **Setup Start** **Stop**

Revision ID:

Item Name: Angle Assembly, Fwd, RH

Start Date: 6/23/2011 **Start Qty:** 2.00 **Cust Item ID:**

Required Date: 7/6/2011 **Req'd Qty:** 2.00 **Customer:**

Reference:

Approvals: **Process Plan:** CL **Date:** 11/06/23 **Tooling:** **Date:** **Run Start** **Stop**

QC: **Date:** **SPC (Y/N):** **Date:**

Sequence ID/ Work Center ID	Operation Description	Set Up/ Run Hours	Tool ID	Tool #	Plan Code	Accept Qty	Reject Qty	Reject Number	Insp. Stamp
Draw Nbr	**Revision Nbr**								
D4038	E								
100	Pick Kit	0.00							
Packaging	**Memo**	0.00							
Packaging									
110		0.00							
Small Fab	**Memo**	0.00							
Small Fab	Assemble as per dwg								
120	QC5- Inspect part completeness to step on W/O	0.00							
QC	**Memo**	0.00							
Quality Control									

11/07/06 (2)

11/07/06 (2)

S 11/07/07

(42)

-042

Dart Aerospace Ltd

W/O:		WORK ORDER CHANGES					
DATE	STEP	PROCEDURE CHANGE	By	Date	Qty	Approval Chief Eng / Prod Mgr	Approval QC Inspector

Part No: _____ **PAR #:** _____ **Fault Category:** _____ **NCR:** Yes No **DQA:** _____ **Date:** _____

Resolution: _____ **Disposition:** _____ **QA: N/C Closed:** _____ **Date:** _____

NCR:		WORK ORDER NON-CONFORMANCE (NCR)						
DATE	STEP	Description of NC Section A	Corrective Action Section B			Verification Section C	Approval Chief Eng	Approval QC Inspector
			Initial Chief Eng	Action Description Chief Eng	Sign & Date			

NOTE: Date & initial all entries

H:\fFORMS\Quality Assurance\approved QA\NCRWO RevE

Work Order ID 71123

Thursday, June 23, 2011 11:04:56 AM

Item ID: D4038-042 **Accept** **Setup Start** **Stop**

Revision ID:

Item Name: Angle Assembly, Fwd, RH

Start Date: 6/23/2011 **Start Qty:** 2.00 **Cust Item ID:**

Required Date: 7/6/2011 **Req'd Qty:** 2.00 **Customer:**

Reference:

Run Start **Stop**

Approvals: **Process Plan:** _____ **Date:** _____ **Tooling:** _____ **Date:** _____

QC: _____ **Date:** _____ **SPC (Y/N):** _____ **Date:** _____

Sequence ID/ Work Center ID	Operation Description	Set Up/ Run Hours	Tool ID	Tool #	Plan Code	Accept Qty	Reject Qty	Reject Number	Insp. Stamp
130	Identify as per dwg & Stock Location: 138	0.00					11/7/08		
Packaging	Memo	0.00							
Packaging									
140	QC21- Final Inspection - Work Order Release	0.00					11/7/11		
QC	Memo	0.00							
Quality Control									

MF
11-07-08

Dart Aerospace Ltd

W/O:		WORK ORDER CHANGES					
DATE	STEP	PROCEDURE CHANGE	By	Date	Qty	Approval Chief Eng / Prod Mgr	Approval QC Inspector

Part No: _____ **PAR #:** _____ **Fault Category:** _____ **NCR:** Yes No **DQA:** _____ **Date:** _____

Resolution: _____ **Disposition:** _____ **QA: N/C Closed:** _____ **Date:** _____

NCR:		WORK ORDER NON-CONFORMANCE (NCR)						
DATE	STEP	Description of NC Section A	Corrective Action Section B			Verification Section C	Approval Chief Eng	Approval QC Inspector
			Initial Chief Eng	Action Description Chief Eng	Sign & Date			

NOTE: Date & initial all entries

Picklist Print

Thursday, June 23, 2011 11:04:53 AM

Work Order ID: 71123

Parent Item: D4038-042

Parent Item Name: Angle Assembly, Fwd, RH

Start Date: 6/23/2011 **Required Date:** 7/6/2011

Start Qty: 2.00 **Required Qty:** 2.00

Comments: IPP REV:A NEW ISSUE 10-04-21 JLM VERIFIED BY:EC IPP
Rev:B 11.01.31 as per dwg rev.c DD verified by:ec

Component Item ID/ Item Name	Replacement Item ID	Mfg/ Purch	Bin Item	Primary Location	Last Location	Route Seq ID	Unit of Measure	Qty on Hand	Qty per Kit	Total Qty	Qty Issued	Date Issued	Status
D4038-2 Angle, Fwd, RH		Manufactured	No			100 B70474	Each	0.0000 20	1	2		11/07/06	
D4038-6 Block		Manufactured	No			100 B70417	Each	0.0000 20	1	2		11/07/06	
D4038-10 Block		Manufactured	No			100 B70421	Each	0.0000 20	1	2		11/07/06	
AN3-14A Bolt		Purchased	No			100	Each	144.0000	2	4		11/07/06	
				Location		**Loc Qty**		**Loc Code**					
				ST352		144							
					117688	44				4			
					117872	100							
MS21042L3 Nut		Purchased	No			100	Each	2,025.000	2	4		11/07/06	
				Location		**Loc Qty**		**Loc Code**					
				ST300		2025							
					116549	325							
					117441	800							
					117601	400							
					117885	500				4			

Dart Aerospace Ltd

W/O:		WORK ORDER CHANGES					
DATE	STEP	PROCEDURE CHANGE	By	Date	Qty	Approval Chief Eng / Prod Mgr	Approval QC Inspector

Part No: _____ PAR #: _____ Fault Category: _____ NCR: Yes No DQA: _____ Date: _____

Resolution: _____ Disposition: _____ QA: N/C Closed: _____ Date: _____

NCR:		WORK ORDER NON-CONFORMANCE (NCR)						
DATE	STEP	Description of NC Section A	Corrective Action Section B			Verification Section C	Approval Chief Eng	Approval QC Inspector
			Initial Chief Eng	Action Description Chief Eng	Sign & Date			

NOTE: Date & initial all entries

H:\fFORMS\Quality Assurance\approved QA\NCRWO RevE

Picklist Print

Thursday, June 23, 2011 11:04:53 AM

Work Order ID: 71123

Parent Item: D4038-042

Parent Item Name: Angle Assembly, Fwd, RH

Start Date: 6/23/2011 **Required Date:** 7/6/2011

Start Qty: 2.00 **Required Qty:** 2.00

NAS1149D0363J Washer	Purchased	No	100	Each	3,737.000	4	8	8/11/07/06

Location	Loc Qty	Loc Code
ST298	3737	
117291	737	
117505	500	
117601	500	
118077	2000	

Dart Aerospace Ltd

W/O:		WORK ORDER CHANGES					
DATE	STEP	PROCEDURE CHANGE	By	Date	Qty	Approval Chief Eng / Prod Mgr	Approval QC Inspector

Part No: _____ **PAR #:** _____ **Fault Category:** _____ **NCR:** Yes No **DQA:** _____ **Date:** _____

Resolution: _____ **Disposition:** _____ **QA: N/C Closed:** _____ **Date:** _____

NCR:		WORK ORDER NON-CONFORMANCE (NCR)						
DATE	STEP	Description of NC Section A	Corrective Action Section B			Verification Section C	Approval Chief Eng	Approval QC Inspector
			Initial Chief Eng	Action Description Chief Eng	Sign & Date			

NOTE: Date & initial all entries

H:\fFORMS\Quality Assurance\approved QA\NCRWO RevE

ITEM NO.	QTY. -041	QTY. -042	PART NUMBER	DESCRIPTION
1	X		D4038-041	ANGLE ASSEMBLY, FWD, LH
2		X	D4038-042	ANGLE ASSEMBLY, FWD, RH
3	1		D4038-1	ANGLE, FWD, LH
4		1	D4038-2	ANGLE, FWD, RH
5	1		D4038-5	BLOCK
6		1	D4038-6	BLOCK
7	1		D4038-9	BLOCK
8		1	D4038-10	BLOCK
9	2	2	AN3-14A	BOLT
10	2	2	MS21042L3	NUT
11	4	4	NAS1149D0363J	WASHER (AN960JD10)

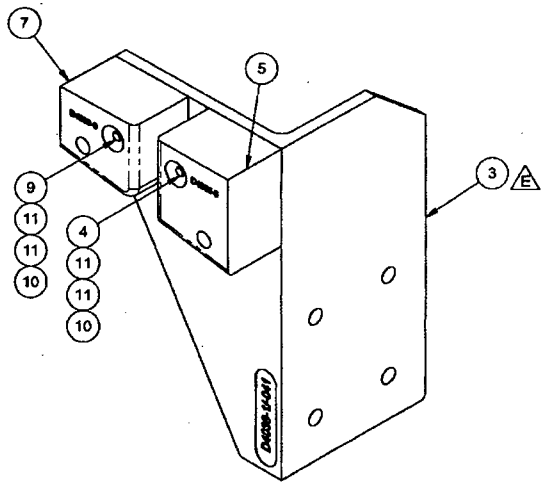

D4038-041 ANGLE ASSEMBLY, FWD, LH

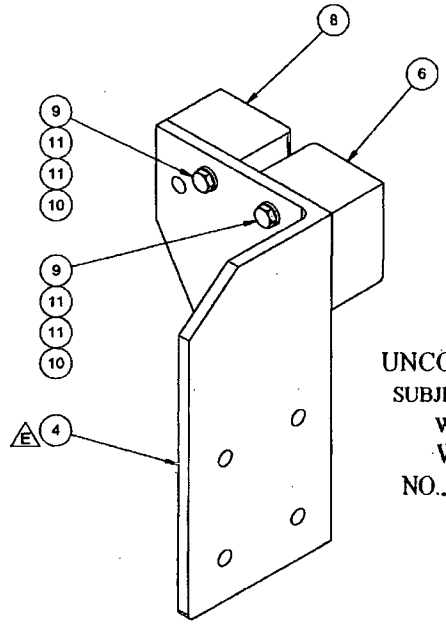

D4038-042 ANGLE ASSEMBLY, FWD, RH

SHOP COPY
RETURN TO
ENGINEERING
UNCONTROLLED COPY
SUBJECT TO AMENDMENT
WITHOUT NOTICE
WORK ORDER
NO. 7/123

RELEASED
2011-04-21

NOTES:
1) MATERIAL: N/A
2) FINISH: POWDER COAT "WHITE" (4.3.5.1) PER DART QSI 005 4.3
3) TOLERANCES: PER DART QSI 018 UNLESS OTHERWISE NOTED
4) UNITS: INCHES UNLESS OTHERWISE NOTED
5) BREAK SHARP EDGES: 0.005 TO 0.010 MAX
6) IDENTIFICATION: N/A
7) WEIGHT: -041 - 1.75 lbs
-042 - 1.74 lbs

REV.	DESCRIPTION	BY	DATE
E	1.19 X 1.00 CHAMFER WAS R1.00. REF: NCR11-543.	MB	11.04.11
D	REVISED D4038-7/-8/-11/-12 AS FOLLOWS: 1.87 WAS 1.73 (C7-9); 2.14 WAS 2.00 (C4-9); 2.13 WAS 2.00 (C7-10); 1.86 WAS 1.73 (C4-10); 1.52 WAS 1.38 (C7-13); 1.79 WAS 1.65 (C4-13); 1.77 WAS 1.65 (C7-14); 1.49 WAS 1.38 (C4-14). REASON: NCR11-456.	MB	11.03.03
C	REVISED D4038-3/-4 AS FOLLOWS: 0.589 WAS 0.714 (B2-5, B4-6); D4038-043/-044 ARE AFFECTED. REASON: NCR11-399.	MB	11.01.20
B	REVISED DIMENSIONS ALL SHEETS, ADD ⌀0.316 HOLES IN -1/-2/-3/-4 PARTS, ADD RADIUS TO -1/-2/-3/-4 PARTS	HS	10.01.05
A	NEW ISSUE	HS	09.12.14

DESIGN		DART AEROSPACE LTD HAWKESBURY, ONTARIO, CANADA
DRAWN		
CHECKED		DRAWING NO. D4038 — REV. E — SHEET 1 OF 14
MFG. APPR.		
APPROVED		TITLE: BRACKET — SCALE: NTS
DE APPR.		
DATE	11.04.11	

COPYRIGHT © 2009 BY DART AEROSPACE LTD
THIS DOCUMENT IS PRIVATE AND CONFIDENTIAL AND IS SUPPLIED ON THE EXPRESS CONDITION THAT IT IS NOT TO BE USED FOR ANY PURPOSE OR COPIED OR COMMUNICATED TO ANY OTHER PERSON WITHOUT WRITTEN PERMISSION FROM DART AEROSPACE LTD.

ITEM NO.	QTY. -043	QTY. -044	PART NUMBER	DESCRIPTION
1	X		D4038-043	ANGLE ASSEMBLY, AFT, LH
2		X	D4038-044	ANGLE ASSEMBLY, AFT, RH
3	1		D4038-3	ANGLE, AFT, LH
4		1	D4038-4	ANGLE, AFT, RH
5	1		D4038-7	BLOCK
6		1	D4038-8	BLOCK
7	1		D4038-11	BLOCK
8		1	D4038-12	BLOCK
9	2	2	AN3-14A	BOLT
10	2	2	MS21042L3	NUT
11	4	4	NAS1149D0363J	WASHER (AN960JD10)

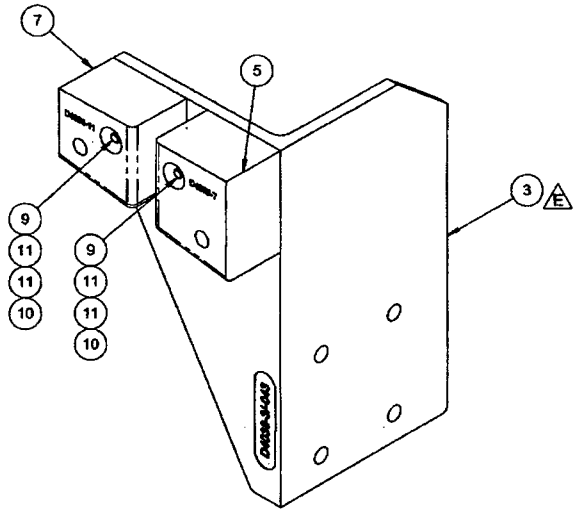

D4038-043 ANGLE ASSEMBLY, AFT, LH

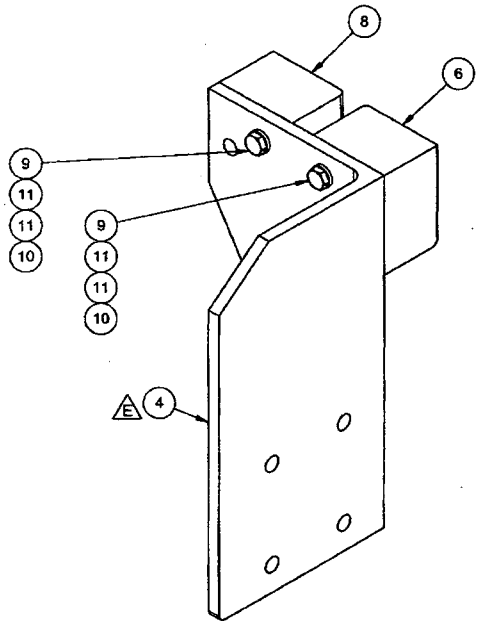

D4038-044 ANGLE ASSEMBLY, AFT, RH

RELEASED
2011-04-21

NOTES:
1) MATERIAL: N/A
2) FINISH: POWDER COAT "WHITE" (4.3.5.1) PER DART QSI 005 4.3
3) TOLERANCES: PER DART QSI 018 UNLESS OTHERWISE NOTED
4) UNITS: INCHES UNLESS OTHERWISE NOTED
5) BREAK SHARP EDGES: 0.005 TO 0.010 MAX
6) IDENTIFICATION: N/A
7) WEIGHT: -043 - 1.96 lbs
-044 - 1.74 lbs

DESIGN		DART AEROSPACE LTD HAWKESBURY, ONTARIO, CANADA
DRAWN		
CHECKED		DRAWING NO. D4038 — REV. E — SHEET 2 OF 14
MFG. APPR.		
APPROVED		TITLE: BRACKET — SCALE: NTS
DE APPR.		
DATE	11.04.11	

COPYRIGHT © 2009 BY DART AEROSPACE LTD
THIS DOCUMENT IS PRIVATE AND CONFIDENTIAL AND IS SUPPLIED ON THE EXPRESS CONDITION THAT IT IS NOT TO BE USED FOR ANY PURPOSE OR COPIED OR COMMUNICATED TO ANY OTHER PERSON WITHOUT WRITTEN PERMISSION FROM DART AEROSPACE LTD.

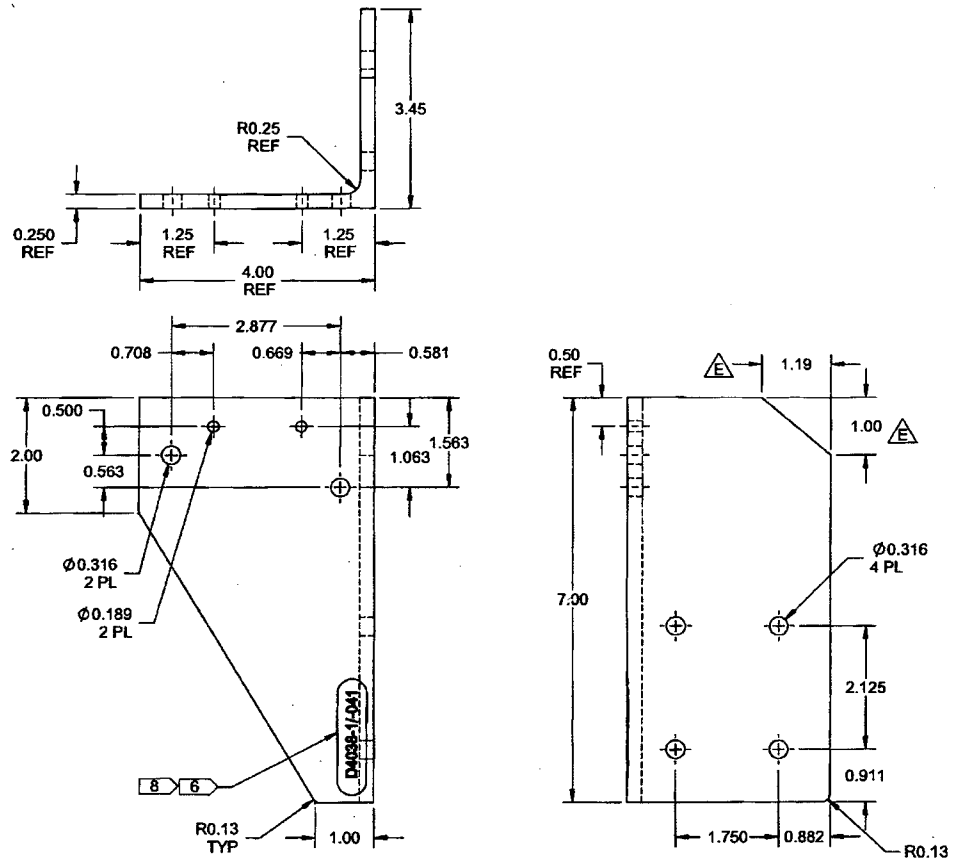

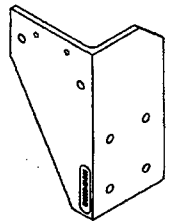

D4038-1 ANGLE, FWD, LH

RELEASED
2011-04-21

NOTES:
1) MATERIAL: 6061-T6/T6510/T6511 ALUMINUM ANGLE, 4.000 X 4.000 X 0.250
PER AMS-QQ-A-200/8
REF DART SPEC M6061T6A4.000XW250
2) FINISH: CHEMICAL CONVERSION COAT PER DART QSI 005 4.1
3) TOLERANCES: PER DART QSI 018 UNLESS OTHERWISE NOTED
4) UNITS: INCHES UNLESS OTHERWISE NOTED
5) BREAK SHARP EDGES: 0.005 TO 0.010 MAX
6) IDENTIFICATION: ENGRAVE P/N IN THIS AREA AS SHOWN (NEAR SIDE ONLY) TO MAX
DEPTH OF 0.010 IN 0.18 HIGH LETTERS WITH MIN RADIUS TOOL OF 0.015
7) WEIGHT: 1.03 lbs
8) SPOT FACE MAX DEPTH OF 0.010 PRIOR TO MARKING

DESIGN		**DART AEROSPACE LTD** HAWKESBURY, ONTARIO, CANADA
DRAWN		
CHECKED		DRAWING NO. D4038 — REV. E — SHEET 3 OF 14
MFG. APPR.		
APPROVED		TITLE BRACKET — SCALE NTS
DE APPR.		
DATE 11.04.11		

COPYRIGHT © 2006 BY DART AEROSPACE LTD
THIS DOCUMENT IS PRIVATE AND CONFIDENTIAL AND IS SUPPLIED ON THE EXPRESS CONDITION THAT IT IS NOT TO BE USED FOR ANY PURPOSE OR COPIED OR COMMUNICATED TO ANY OTHER PERSON WITHOUT WRITTEN PERMISSION FROM DART AEROSPACE LTD.

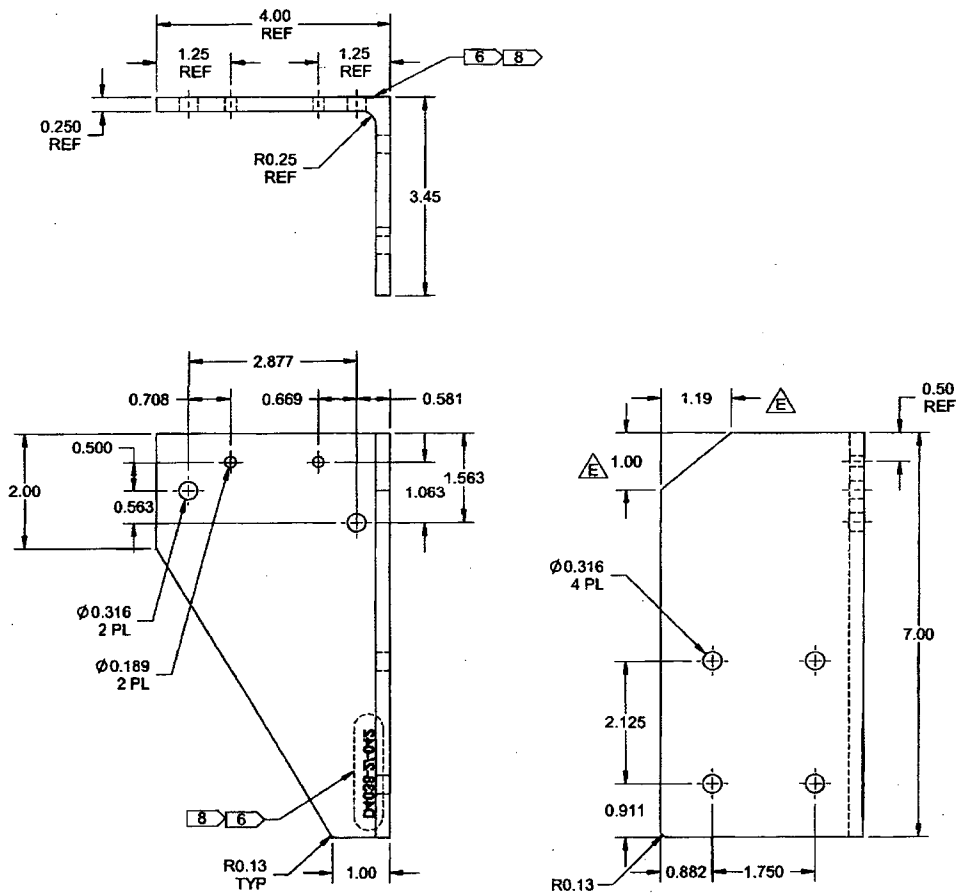

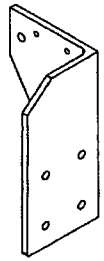

RELEASED
2011-04-2

D4038-2 ANGLE, FWD, RH

NOTES:
1) MATERIAL: 6061-T6/T6510/T6511 ALUMINUM ANGLE, 4.000 X 4.000 X 0.250
PER AMS-QQ-A-200/8
REF DART SPEC M6061T6A4.000XW250
2) FINISH: CHEMICAL CONVERSION COAT PER DART QSI 005 4.1
3) TOLERANCES: PER DART QSI 018 UNLESS OTHERWISE NOTED
4) UNITS: INCHES UNLESS OTHERWISE NOTED
5) BREAK SHARP EDGES: 0.005 TO 0.010 MAX
6) IDENTIFICATION: ENGRAVE P/N IN THIS AREA AS SHOWN (FAR SIDE ONLY) TO MAX
DEPTH OF 0.010 IN 0.18 HIGH LETTERS WITH MIN RADIUS TOOL OF 0.015
7) WEIGHT: 1.03 lbs
8) SPOT FACE MAX DEPTH OF 0.010 PRIOR TO MARKING

DESIGN		DART AEROSPACE LTD HAWKESBURY, ONTARIO, CANADA
DRAWN		
CHECKED		DRAWING NO. D4038 — REV. E — SHEET 4 OF 14
MFG. APPR.		
APPROVED		TITLE: BRACKET — SCALE: NTS
DE APPR.		
DATE	11.04.11	

COPYRIGHT © 2003 BY DART AEROSPACE LTD
THIS DOCUMENT IS PRIVATE AND CONFIDENTIAL AND IS SUPPLIED ON THE EXPRESS CONDITION THAT IT IS NOT TO BE USED FOR ANY PURPOSE OR COPIED OR COMMUNICATED TO ANY OTHER PERSON WITHOUT WRITTEN PERMISSION FROM DART AEROSPACE LTD.

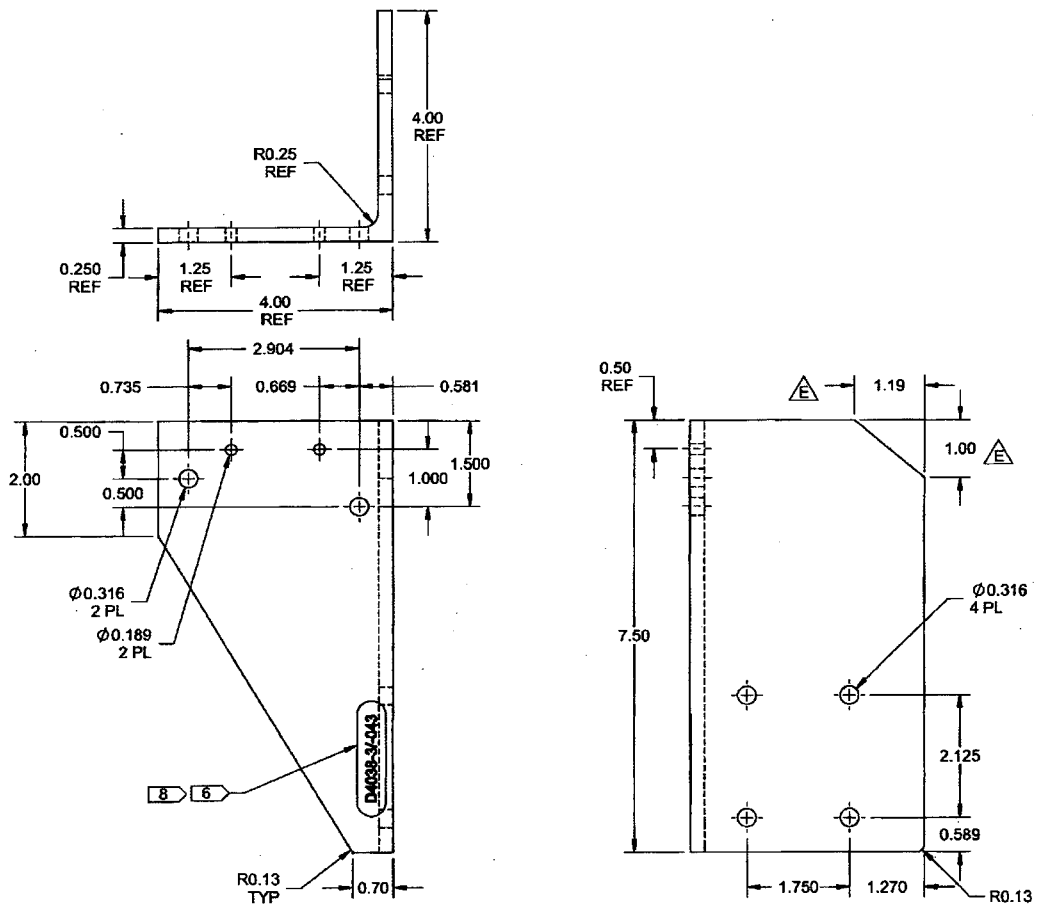

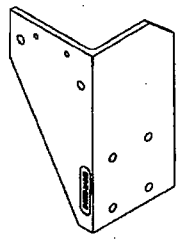

RELEASED
2011-04-21

NOTES:
1) MATERIAL: 6061-T6/T6510/T6511 ALUMINUM ANGLE, 4.000 X 4.000 X 0.250
PER AMS-QQ-A-200/8
REF DART SPEC M6061T6A4.000XW250
2) FINISH: CHEMICAL CONVERSION COAT PER DART QSI 005 4.1
3) TOLERANCES: PER DART QSI 018 UNLESS OTHERWISE NOTED
4) UNITS: INCHES UNLESS OTHERWISE NOTED
5) BREAK SHARP EDGES: 0.005 TO 0.010 MAX
6) IDENTIFICATION: ENGRAVE P/N IN THIS AREA AS SHOWN (NEAR SIDE ONLY) TO MAX
DEPTH OF 0.010 IN 0.18 HIGH LETTERS WITH MIN RADIUS TOOL OF 0.015
7) WEIGHT: 1.18 lbs
8) SPOT FACE MAX DEPTH OF 0.010 PRIOR TO MARKING

D4038-3 ANGLE, AFT, LH

DESIGN		DART AEROSPACE LTD HAWKESBURY, ONTARIO, CANADA
DRAWN		
CHECKED		DRAWING NO. D4038 — REV. E — SHEET 5 OF 14
MFG. APPR.		
APPROVED		TITLE: BRACKET — SCALE: NTS
DE APPR.		
DATE	11.04.11	

COPYRIGHT © 2009 BY DART AEROSPACE LTD
THIS DOCUMENT IS PRIVATE AND CONFIDENTIAL AND IS SUPPLIED ON THE EXPRESS CONDITION THAT IT IS NOT TO BE USED FOR ANY PURPOSE OR COPIED OR COMMUNICATED TO ANY OTHER PERSON WITHOUT WRITTEN PERMISSION FROM DART AEROSPACE LTD.

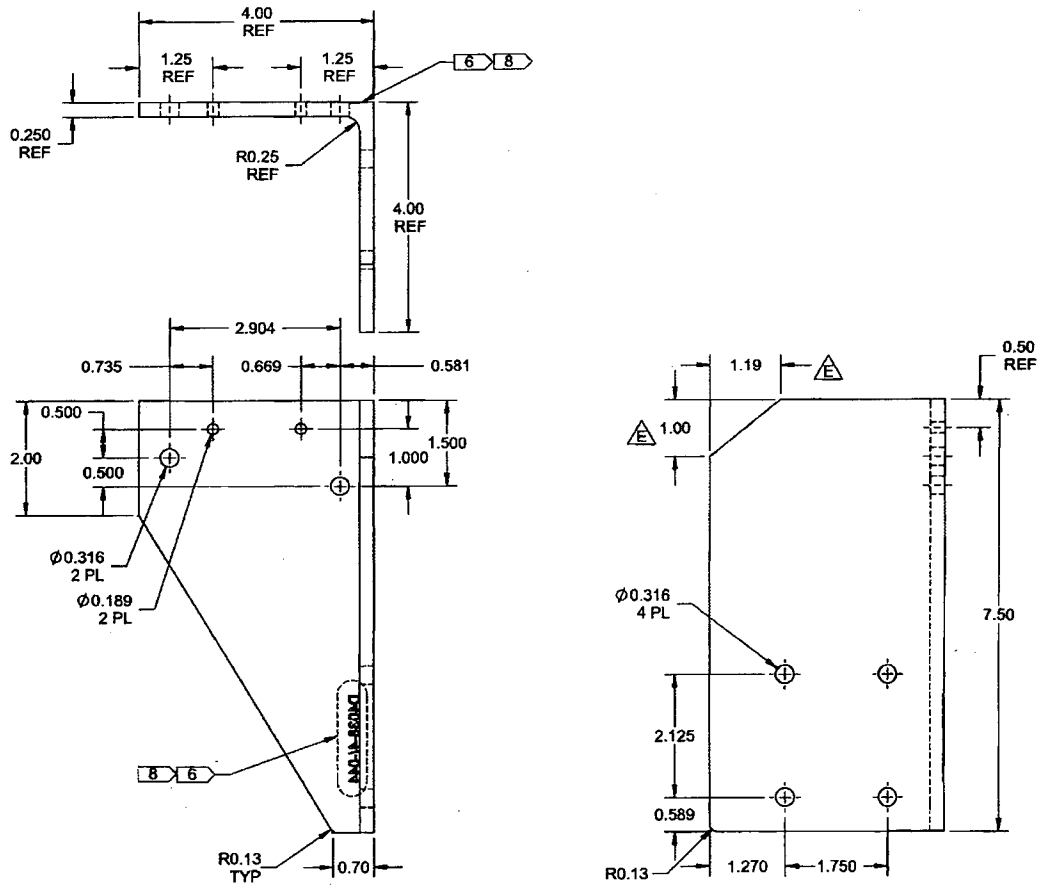

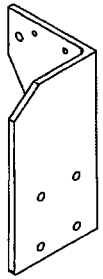

RELEASED
2011-04-21

D4038-4 ANGLE, AFT, RH

NOTES:
1) MATERIAL: 6061-T6/T6510/T6511 ALUMINUM ANGLE, 4.000 X 4.000 X 0.250
PER AMS-QQ-A-200/8
REF DART SPEC M6061T6A4.000XW250
2) FINISH: CHEMICAL CONVERSION COAT PER DART QSI 005 4.1
3) TOLERANCES: PER DART QSI 018 UNLESS OTHERWISE NOTED
4) UNITS: INCHES UNLESS OTHERWISE NOTED
5) BREAK SHARP EDGES: 0.005 TO 0.010 MAX
6) IDENTIFICATION: ENGRAVE P/N IN THIS AREA AS SHOWN (FAR SIDE ONLY) TO MAX
DEPTH OF 0.010 IN 0.18 HIGH LETTERS WITH MIN RADIUS TOOL OF 0.015
7) WEIGHT: 1.18 lbs
8) SPOT FACE MAX DEPTH OF 0.010 PRIOR TO MARKING

DESIGN		DART AEROSPACE LTD HAWKESBURY, ONTARIO, CANADA
DRAWN		
CHECKED		DRAWING NO. D4038 — REV. E — SHEET 6 OF 14
MFG. APPR.		
APPROVED		TITLE: BRACKET — SCALE: NTS
DE APPR.		
DATE	11.04.11	

COPYRIGHT © 2009 BY DART AEROSPACE LTD
THIS DOCUMENT IS PRIVATE AND CONFIDENTIAL AND IS SUPPLIED ON THE EXPRESS CONDITION THAT IT IS NOT TO BE USED FOR ANY PURPOSE OR COPIED OR COMMUNICATED TO ANY OTHER PERSON WITHOUT WRITTEN PERMISSION FROM DART AEROSPACE LTD.

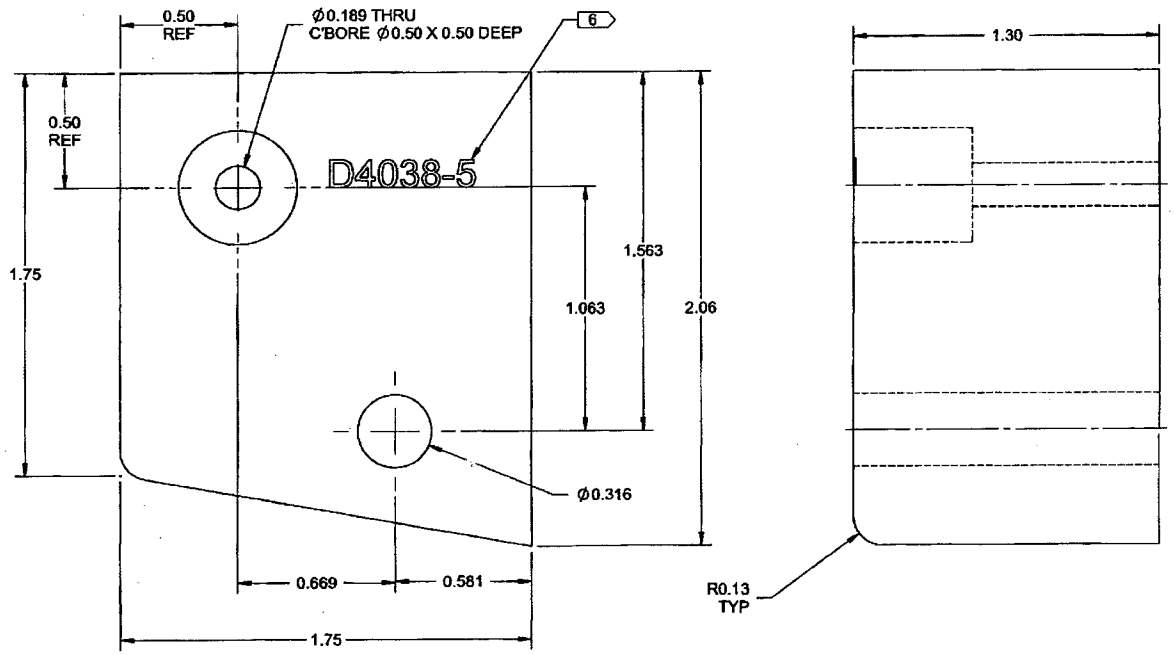

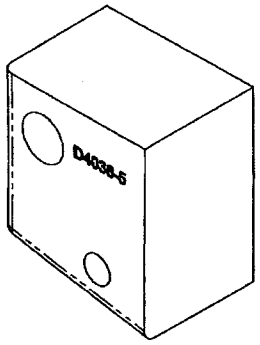

D4038-5 BLOCK

RELEASED
2011-04-21

NOTES:
1) MATERIAL: 6061-T6 (OR 6061-T651/T6510/T6511/T62) ALUMINUM BAR
PER AMS-QQ-A-225/8 (OR AMS 4117/4128/4115/4116)
PER AMS-QQ-A-200/8 (OR AMS 4160)
REF DART SPEC M6061T6B
2) FINISH: CHEMICAL CONVERSION COAT PER DART QSI 005 4.1
3) TOLERANCES: PER DART QSI 018 UNLESS OTHERWISE NOTED
4) UNITS: INCHES UNLESS OTHERWISE NOTED
5) BREAK SHARP EDGES: 0.005 TO 0.010 MAX
6) IDENTIFICATION: ENGRAVE P/N IN THIS AREA AS SHOWN TO MAX DEPTH OF 0.010 IN 0.12 HIGH LETTERS WITH MIN RADIUS TOOL OF 0.015
7) WEIGHT: 0.40 lbs

DESIGN		DART AEROSPACE LTD HAWKESBURY, ONTARIO, CANADA
DRAWN		
CHECKED		DRAWING NO. D4038 — REV. E — SHEET 7 OF 14
MFG. APPR.		
APPROVED		TITLE BRACKET — SCALE NTS
DE APPR.		
DATE 11.04.11		

COPYRIGHT © 2009 BY DART AEROSPACE LTD
THIS DOCUMENT IS PRIVATE AND CONFIDENTIAL AND IS SUPPLIED ON THE EXPRESS CONDITION THAT IT IS NOT TO BE USED FOR ANY PURPOSE OR COPIED OR COMMUNICATED TO ANY OTHER PERSON WITHOUT WRITTEN PERMISSION FROM DART AEROSPACE LTD.

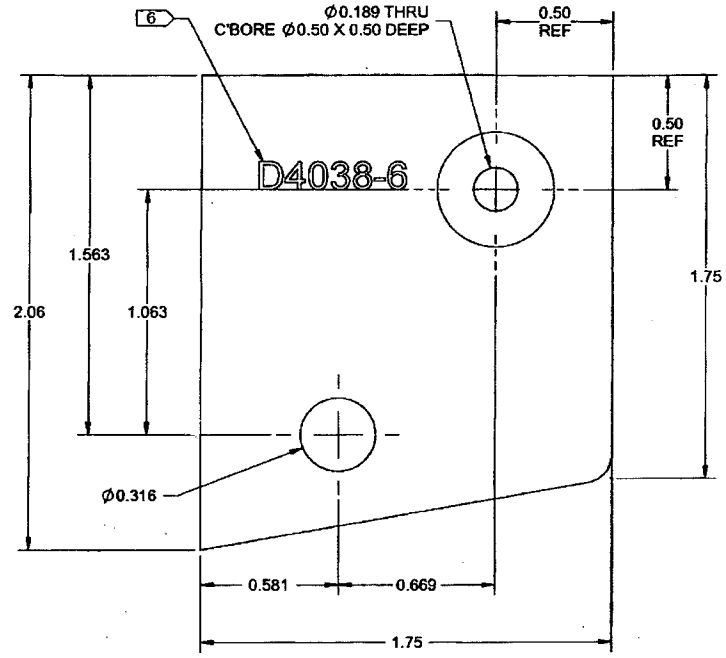

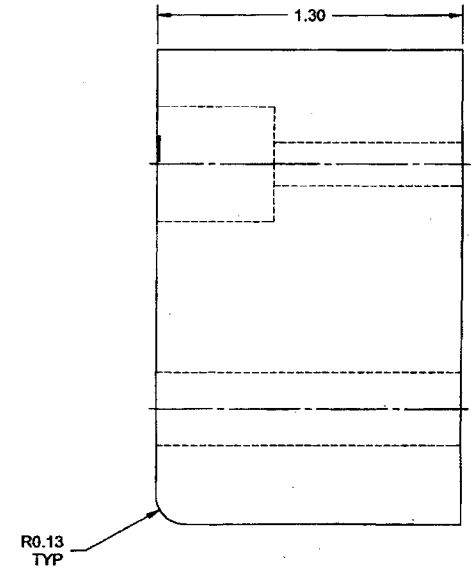

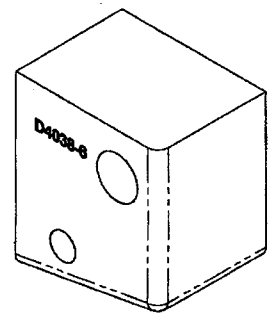

RELEASED
2011-04-2

D4038-6 BLOCK

NOTES:
1) MATERIAL: 6061-T6 (OR 6061-T651/T6510/T6511/T62) ALUMINUM BAR
PER AMS-QQ-A-225/8 (OR AMS 4117/4128/4115/4116)
PER AMS-QQ-A-200/8 (OR AMS 4160)
REF DART SPEC M6061T6B
2) FINISH: CHEMICAL CONVERSION COAT PER DART QSI 005 4.1
3) TOLERANCES: PER DART QSI 018 UNLESS OTHERWISE NOTED
4) UNITS: INCHES UNLESS OTHERWISE NOTED
5) BREAK SHARP EDGES: 0.005 TO 0.010 MAX
6) IDENTIFICATION: ENGRAVE P/N IN THIS AREA AS SHOWN TO MAX DEPTH
OF 0.010 IN 0.12 HIGH LETTERS WITH MIN RADIUS TOOL OF 0.015
7) WEIGHT: 0.40 lbs

DESIGN		DART AEROSPACE LTD HAWKESBURY, ONTARIO, CANADA
DRAWN		
CHECKED		DRAWING NO. D4038 — REV. E — SHEET 8 OF 14
MFG. APPR.		
APPROVED		TITLE BRACKET — SCALE NTS
DE APPR.		
DATE 11.04.11		

COPYRIGHT © 2009 BY DART AEROSPACE LTD
THIS DOCUMENT IS PRIVATE AND CONFIDENTIAL AND IS SUPPLIED ON THE EXPRESS CONDITION THAT IT IS NOT TO BE USED FOR ANY PURPOSE OR COPIED OR COMMUNICATED TO ANY OTHER PERSON WITHOUT WRITTEN PERMISSION FROM DART AEROSPACE LTD.

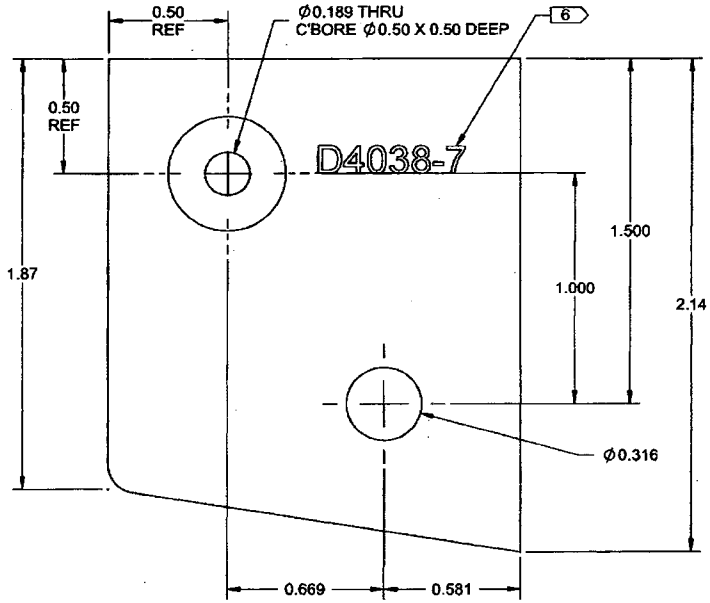

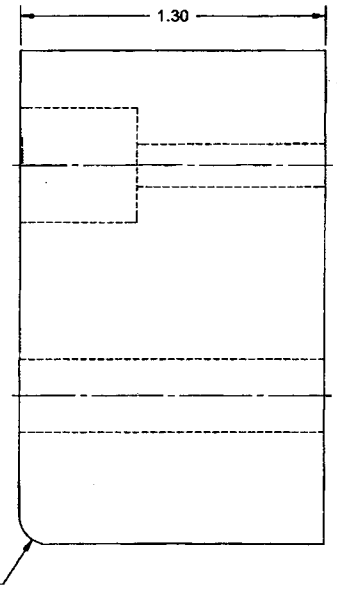

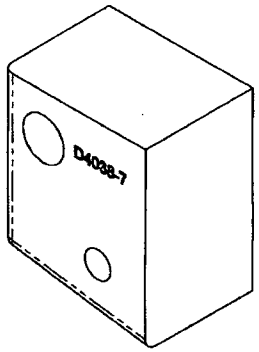

RELEASED
2011-04-21

D4038-7 BLOCK

NOTES:
1) MATERIAL: 6061-T6 (OR 6061-T651/T6510/T6511/T62) ALUMINUM BAR
PER AMS-QQ-A-225/8 (OR AMS 4117/4128/4115/4116)
PER AMS-QQ-A-200/8 (OR AMS 4160)
REF DART SPEC M6061T6B
2) FINISH: CHEMICAL CONVERSION COAT PER DART QSI 005 4.1
3) TOLERANCES: PER DART QSI 018 UNLESS OTHERWISE NOTED
4) UNITS: INCHES UNLESS OTHERWISE NOTED
5) BREAK SHARP EDGES: 0.005 TO 0.010 MAX
6) IDENTIFICATION: ENGRAVE P/N IN THIS AREA AS SHOWN TO MAX DEPTH
OF 0.010 IN 0.12 HIGH LETTERS WITH MIN RADIUS TOOL OF 0.015
7) WEIGHT: 0.42 lbs

DESIGN		DART AEROSPACE LTD HAWKESBURY, ONTARIO, CANADA
DRAWN		
CHECKED		DRAWING NO. D4038 — REV. E — SHEET 9 OF 14
MFG. APPR.		
APPROVED		TITLE BRACKET — SCALE NTS
DE APPR.		
DATE 11.04.11		

COPYRIGHT © 2009 BY DART AEROSPACE LTD
THIS DOCUMENT IS PRIVATE AND CONFIDENTIAL AND IS SUPPLIED ON THE EXPRESS CONDITION THAT IT IS NOT TO BE USED FOR ANY PURPOSE OR COPIED OR COMMUNICATED TO ANY OTHER PERSON WITHOUT WRITTEN PERMISSION FROM DART AEROSPACE LTD.

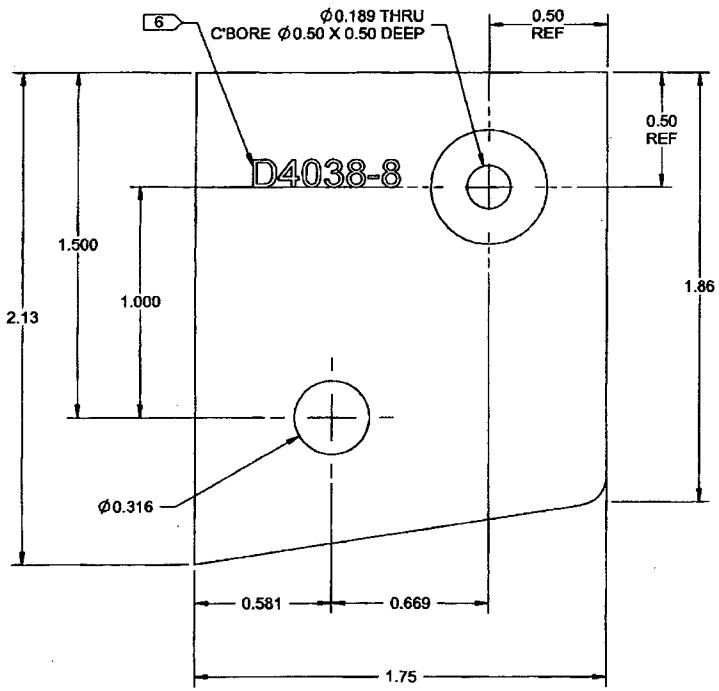

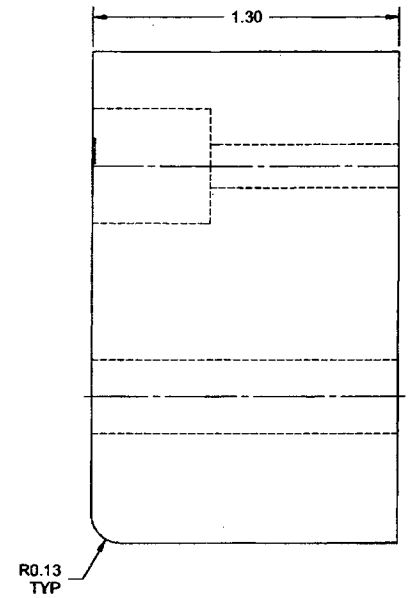

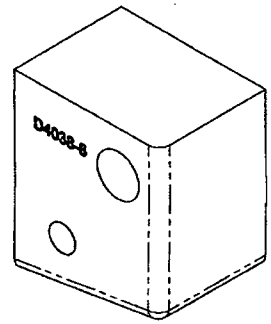

RELEASED
2011-04-21

D4038-8 BLOCK

NOTES:
1) MATERIAL: 6061-T6 (OR 6061-T651/T6510/T6511/T62) ALUMINUM BAR
PER AMS-QQ-A-225/8 (OR AMS 4117/4128/4115/4116)
PER AMS-QQ-A-200/8 (OR AMS 4160)
REF DART SPEC M6061T6B
2) FINISH: CHEMICAL CONVERSION COAT PER DART QSI 005 4.1
3) TOLERANCES: PER DART QSI 018 UNLESS OTHERWISE NOTED
4) UNITS: INCHES UNLESS OTHERWISE NOTED
5) BREAK SHARP EDGES: 0.005 TO 0.010 MAX
6) IDENTIFICATION: ENGRAVE P/N IN THIS AREA AS SHOWN TO MAX DEPTH
OF 0.010 IN 0.12 HIGH LETTERS WITH MIN RADIUS TOOL OF 0.015
7) WEIGHT: 0.42 lbs

DESIGN		DART AEROSPACE LTD HAWKESBURY, ONTARIO, CANADA
DRAWN		
CHECKED		DRAWING NO. D4038 — REV. E — SHEET 10 OF 14
MFG. APPR.		
APPROVED		TITLE: BRACKET — SCALE: NTS
DE APPR.		
DATE 11.04.11		

COPYRIGHT © 2009 BY DART AEROSPACE LTD
THIS DOCUMENT IS PRIVATE AND CONFIDENTIAL AND IS SUPPLIED ON THE EXPRESS CONDITION THAT IT IS NOT TO BE USED FOR ANY PURPOSE OR COPIED OR COMMUNICATED TO ANY OTHER PERSON WITHOUT WRITTEN PERMISSION FROM DART AEROSPACE LTD.

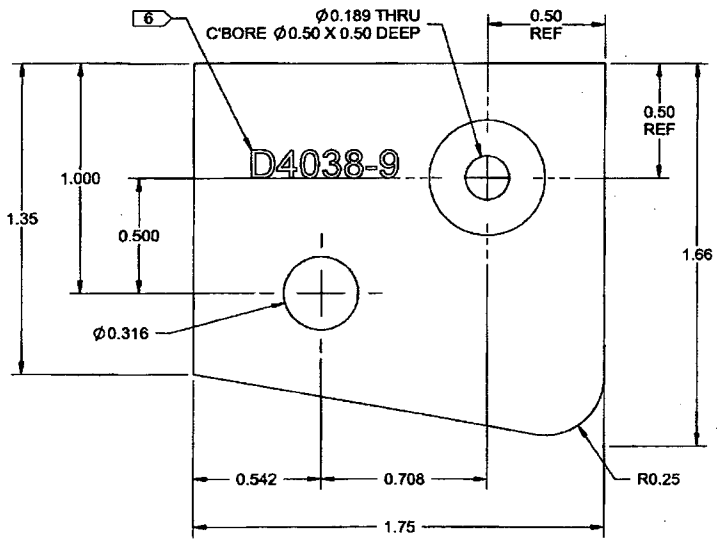

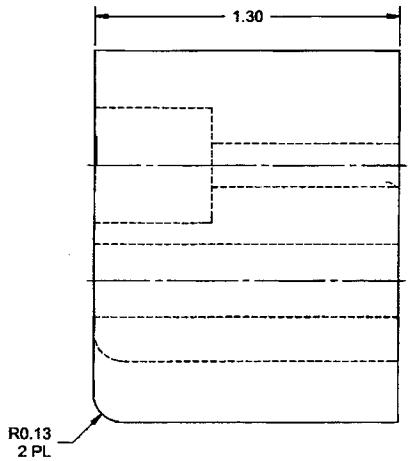

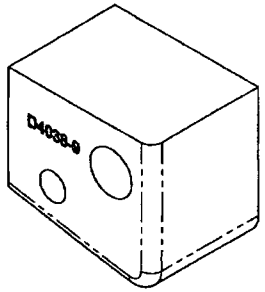

D4038-9 BLOCK

RELEASED
2011-04-21

NOTES:
1) MATERIAL: 6061-T6 (OR 6061-T651/T6510/T6511/T62) ALUMINUM BAR
PER AMS-QQ-A-225/8 (OR AMS 4117/4128/4115/4116)
PER AMS-QQ-A-200/8 (OR AMS 4160)
REF DART SPEC M6061T6B
2) FINISH: CHEMICAL CONVERSION COAT PER DART QSI 005 4.1
3) TOLERANCES: PER DART QSI 018 UNLESS OTHERWISE NOTED
4) UNITS: INCHES UNLESS OTHERWISE NOTED
5) BREAK SHARP EDGES: 0.005 TO 0.010 MAX
6) IDENTIFICATION: ENGRAVE P/N IN THIS AREA AS SHOWN TO MAX DEPTH
OF 0.010 IN 0.12 HIGH LETTERS WITH MIN RADIUS TOOL OF 0.015
7) WEIGHT: 0.31 lbs

DESIGN		DART AEROSPACE LTD HAWKESBURY, ONTARIO, CANADA
DRAWN		
CHECKED		DRAWING NO. D4038 — REV. E — SHEET 11 OF 14
MFG. APPR.		
APPROVED		TITLE: BRACKET — SCALE: NTS
DE APPR.		
DATE	11.04.11	

COPYRIGHT © 2009 BY DART AEROSPACE LTD
THIS DOCUMENT IS PROVIDED CONFIDENTIAL AND IS SUPPLIED ON THE EXPRESS CONDITION THAT IT IS NOT TO BE USED FOR ANY PURPOSE OR COPIED OR COMMUNICATED TO ANY OTHER PERSON WITHOUT WRITTEN PERMISSION FROM DART AEROSPACE LTD.

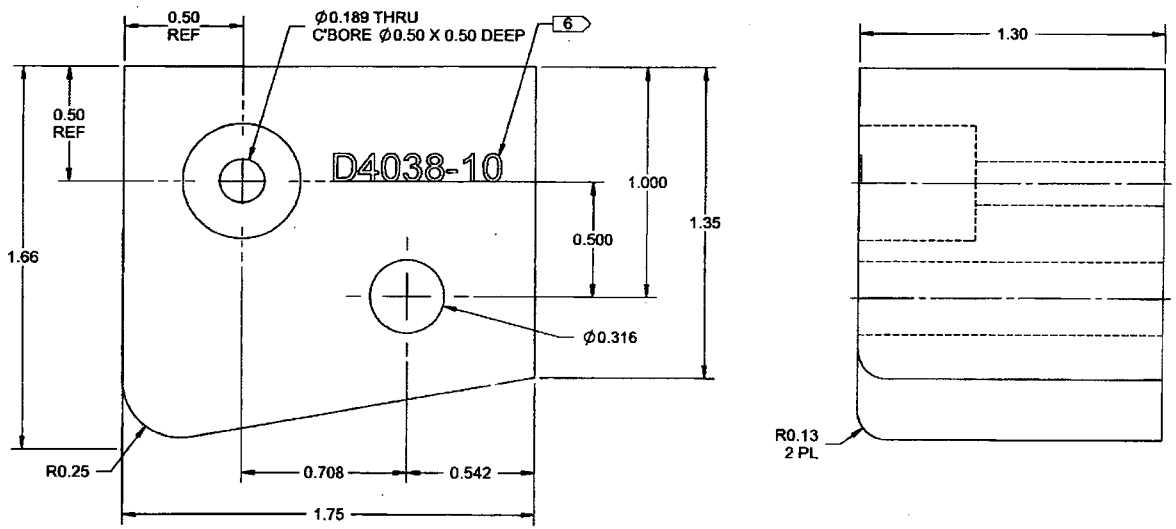

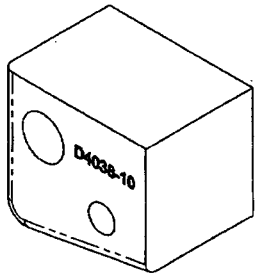

RELEASED
2011-04-20

D4038-10 BLOCK

NOTES:
1) MATERIAL: 6061-T6 (OR 6061-T651/T6510/T6511/T62) ALUMINUM BAR
PER AMS-QQ-A-225/8 (OR AMS 4117/4128/4115/4116)
PER AMS-QQ-A-200/8 (OR AMS 4160)
REF DART SPEC M6061T6B
2) FINISH: CHEMICAL CONVERSION COAT PER DART QSI 005 4.1
3) TOLERANCES: PER DART QSI 018 UNLESS OTHERWISE NOTED
4) UNITS: INCHES UNLESS OTHERWISE NOTED
5) BREAK SHARP EDGES: 0.005 TO 0.010 MAX
6) IDENTIFICATION: ENGRAVE P/N IN THIS AREA AS SHOWN TO MAX DEPTH
OF 0.010 IN 0.12 HIGH LETTERS WITH MIN RADIUS TOOL OF 0.015
7) WEIGHT: 0.31 lbs

DESIGN		**DART AEROSPACE LTD** HAWKESBURY, ONTARIO, CANADA
DRAWN		
CHECKED		DRAWING NO. D4038 — REV. E — SHEET 12 OF 14
MFG. APPR.		
APPROVED		TITLE: BRACKET — SCALE: NTS
DE APPR.		
DATE	11.04.11	

COPYRIGHT © 2009 BY DART AEROSPACE LTD
THIS DOCUMENT IS PRIVATE AND CONFIDENTIAL AND IS SUPPLIED ON THE EXPRESS CONDITION THAT IT IS NOT TO BE USED FOR ANY PURPOSE OR COPIED OR COMMUNICATED TO ANY OTHER PERSON WITHOUT WRITTEN PERMISSION FROM DART AEROSPACE LTD.

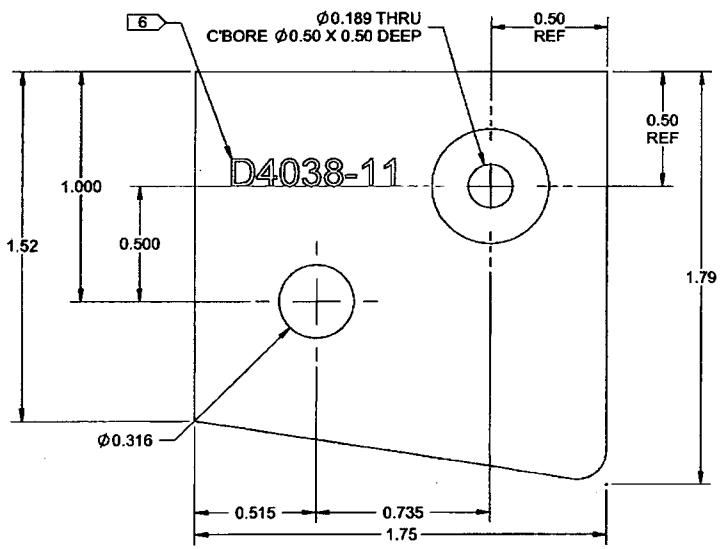

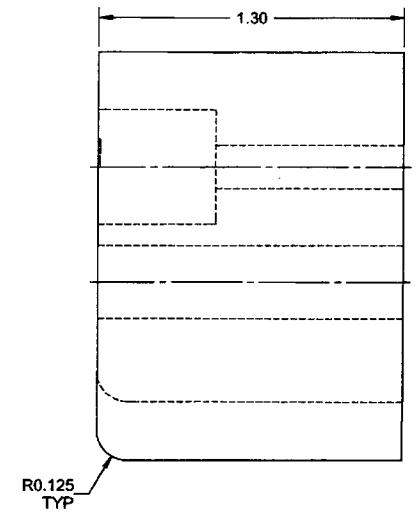

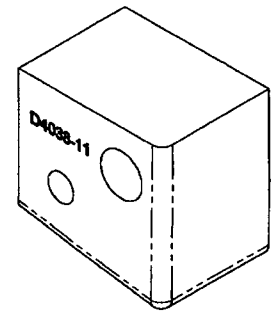

RELEASED
2011-04-22

D4038-11 BLOCK

NOTES:
1) MATERIAL: 6061-T6 (OR 6061-T651/T6510/T6511/T62) ALUMINUM BAR
PER AMS-QQ-A-225/8 (OR AMS 4117/4128/4115/4116)
PER AMS-QQ-A-200/8 (OR AMS 4160)
REF DART SPEC M6061T6B
2) FINISH: CHEMICAL CONVERSION COAT PER DART QSI 005 4.1
3) TOLERANCES: PER DART QSI 018 UNLESS OTHERWISE NOTED
4) UNITS: INCHES UNLESS OTHERWISE NOTED
5) BREAK SHARP EDGES: 0.005 TO 0.010 MAX
6) IDENTIFICATION: ENGRAVE P/N IN THIS AREA AS SHOWN TO MAX DEPTH
OF 0.010 IN 0.12 HIGH LETTERS WITH MIN RADIUS TOOL OF 0.015
7) WEIGHT: 0.34 lbs

DESIGN		**DART AEROSPACE LTD** HAWKESBURY, ONTARIO, CANADA
DRAWN		
CHECKED		DRAWING NO. D4038 — REV. E — SHEET 13 OF 14
MFG. APPR.		
APPROVED		TITLE BRACKET — SCALE NTS
DE APPR.		
DATE 11.04.11		

COPYRIGHT © 2009 BY DART AEROSPACE LTD
THIS DOCUMENT IS PRIVATE AND CONFIDENTIAL AND IS SUPPLIED ON THE EXPRESS CONDITION THAT IT IS NOT TO BE USED FOR ANY PURPOSE OR COPIED OR COMMUNICATED TO ANY OTHER PERSON WITHOUT WRITTEN PERMISSION FROM DART AEROSPACE LTD.

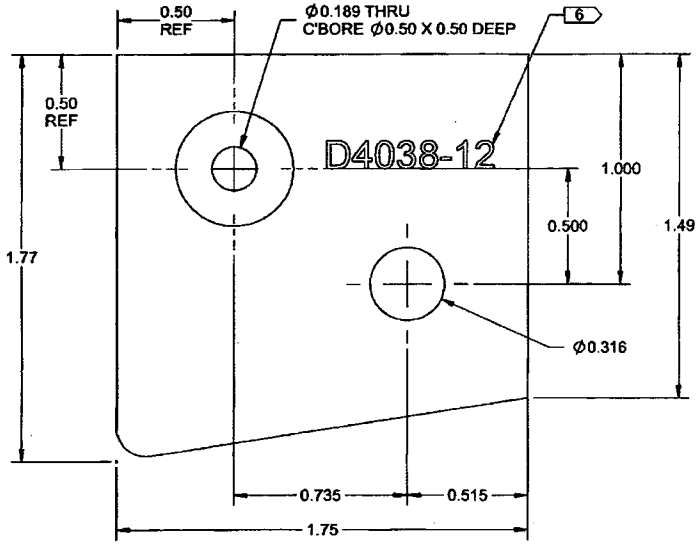

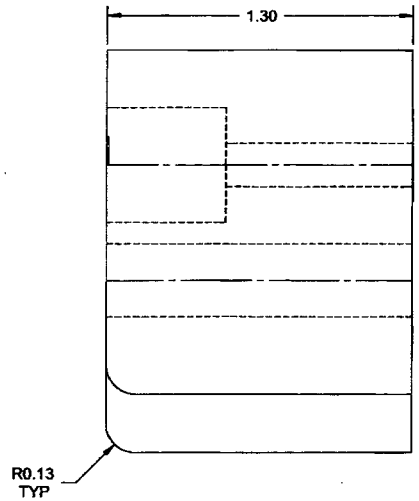

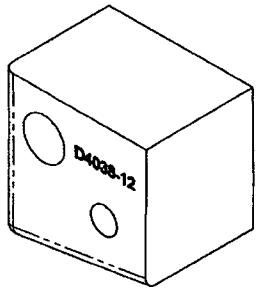

RELEASED
2011 -04- 21

D4038-12 BLOCK

NOTES:
1) MATERIAL: 6061-T6 (OR 6061-T651/T6510/T6511/T62) ALUMINUM BAR
PER AMS-QQ-A-225/8 (OR AMS 4117/4128/4115/4116)
PER AMS-QQ-A-200/8 (OR AMS 4160)
REF DART SPEC M6061T6B
2) FINISH: CHEMICAL CONVERSION COAT PER DART QSI 005 4.1
3) TOLERANCES: PER DART QSI 018 UNLESS OTHERWISE NOTED
4) UNITS: INCHES UNLESS OTHERWISE NOTED
5) BREAK SHARP EDGES: 0.005 TO 0.010 MAX
6) IDENTIFICATION: ENGRAVE P/N IN THIS AREA AS SHOWN TO MAX DEPTH
OF 0.010 IN 0.12 HIGH LETTERS WITH MIN RADIUS TOOL OF 0.015
7) WEIGHT: 0.34 lbs

DESIGN		DART AEROSPACE LTD HAWKESBURY, ONTARIO, CANADA
DRAWN		
CHECKED		DRAWING NO. D4038 — REV. E — SHEET 14 OF 14
MFG. APPR.		
APPROVED		TITLE BRACKET — SCALE NTS
DE APPR.		
DATE 11.04.11		

COPYRIGHT © 2003 BY DART AEROSPACE LTD
THIS DOCUMENT IS PRIVATE AND CONFIDENTIAL AND IS SUPPLIED ON THE EXPRESS CONDITION THAT IT IS NOT TO BE USED FOR ANY PURPOSE OR COPIED OR COMMUNICATED TO ANY OTHER PERSON WITHOUT WRITTEN PERMISSION FROM DART AEROSPACE LTD.